Published: 11-May-2011

Clutch Controls - TDV6 2.7L Diesel -

Torque Specifications

Description	Nm	lb-ft
Clutch pedal nut	45	33
Clutch slave cylinder bolts	10	7
Clutch bleed screw	10	7
Slave cylinder fluid pipe clamp bolt	10	7
Master cylinder bolts	10	7
Clutch pedal assembly nuts	25	18
Brake pedal bracket Torx bolt	10	7
Clutch master cylinder nuts	10	7
Transmission heat shield	10	7

transmissionmanuals.com

Published: 11-May-2011

Clutch Controls - TDV6 2.7L Diesel - Clutch Controls

Description and Operation

For additional information, refer to: Clutch (308-01 Clutch - TDV6 2.7L Diesel, Description and Operation).

transmissionmanuals.com

Published: 11-May-2011

Clutch Controls - TDV6 2.7L Diesel - Clutch Master Cylinder

Removal and Installation

Removal

CAUTION: Brake fluid will damage paint finished surfaces. If spilled, immediately remove the fluid and clean the area with water.

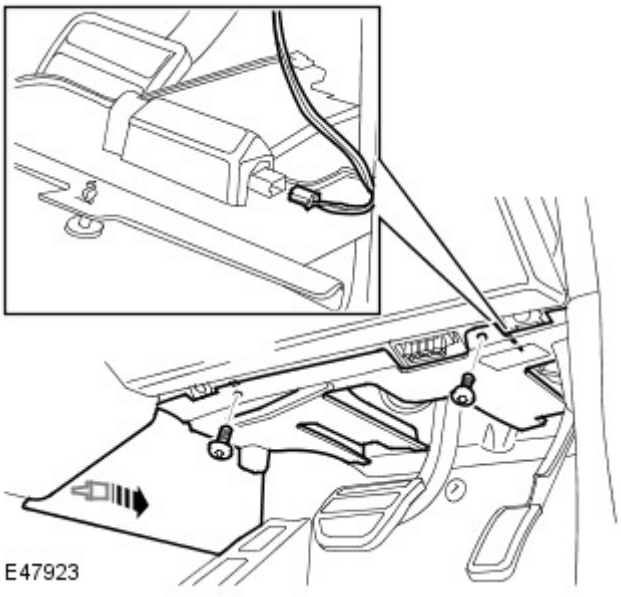

1. Remove the driver side closing trim panel.

- Release the clip.
- Remove the 2 screws.
- Disconnect the electrical connector.

2. Release the clutch master cylinder clevis pin.

- Remove the clip.

3. Remove clutch pedal spring assister.

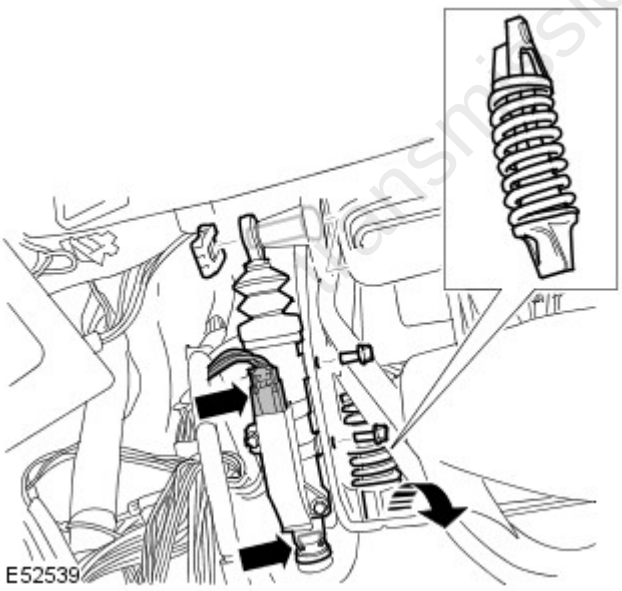

4. CAUTION: Before disconnecting or removing the components, ensure the area around the joint faces and connections are clean. Plug open connections to prevent contamination.

Release the clutch master cylinder.

- Position a container to collect the fluid.
- Disconnect the electrical connector.
- Remove the 2 bolts.
- Remove the clip.

Transmissionmanuals.com

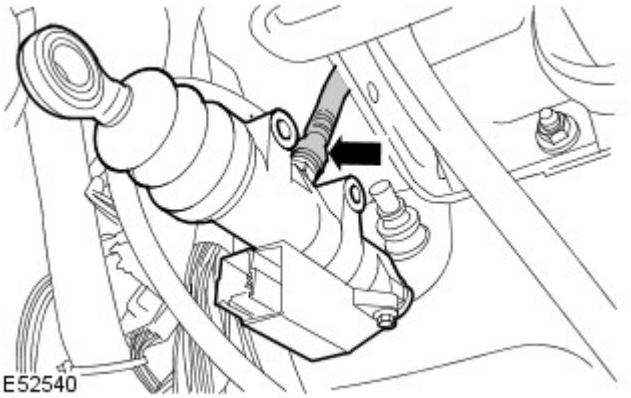

5. Remove the clutch master cylinder.
   - Disconnect the fluid supply line and discard the O-ring seal.

Installation

1. Install the clutch master cylinder.
   - Using a new seal, connect the fluid supply line.
   - Install the clip.
   - Tighten the bolts to 10 Nm (7 lb.ft).
   - Connect the electrical connector.
   - Remove the container.
2. Install the clutch pedal spring assister.
3. Secure the clevis pin.
   - Fit the clip.
4. Install the closing trim panel.
   - Connect the electrical connector.
   - Secure the clip.
   - Tighten the screws.
5. Raise and support the vehicle.
6. Bleed the clutch system.
   For additional information, refer to: Clutch System Bleeding (308-00 Manual Transmission/Transaxle and Clutch - General Information, General Procedures).

transmissionmanuals.com

Published: 11-May-2011

Clutch Controls - TDV6 2.7L Diesel - Clutch Pedal

Removal and Installation

Removal

1. Remove the brake booster.
   For additional information, refer to: Brake Booster (206-07, Removal and Installation).
2. Remove the headlamp switch.
   For additional information, refer to: Headlamp Switch (417-01, Removal and Installation).
3. Remove the driver side closing trim panel.
   - Release the clip.
   - Remove the 2 screws.
   - Disconnect the electrical connector.

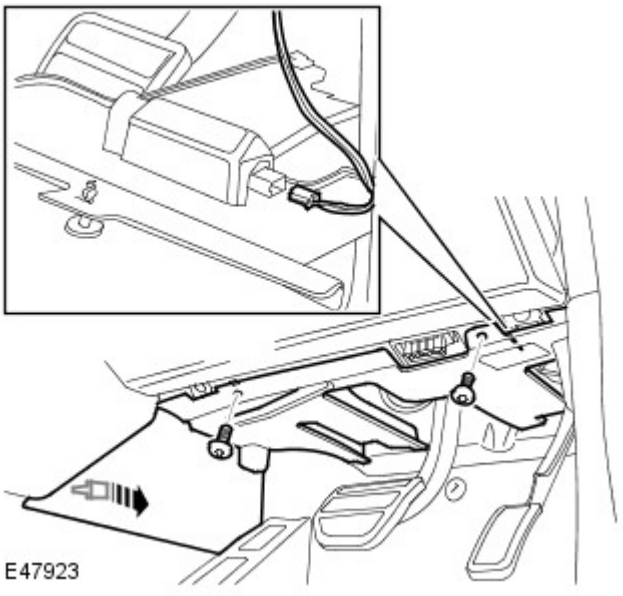

4. Remove the instrument panel access panel.
   - Release the 2 clips.

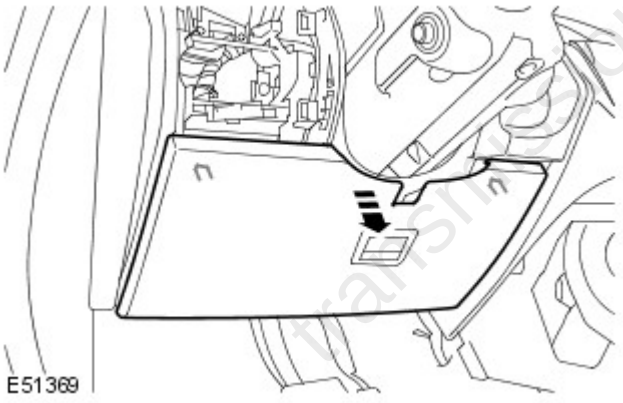

5. Remove the brake pedal bracket.
   - Release the wiring harness clip.
   - Remove the 4 Torx bolts.

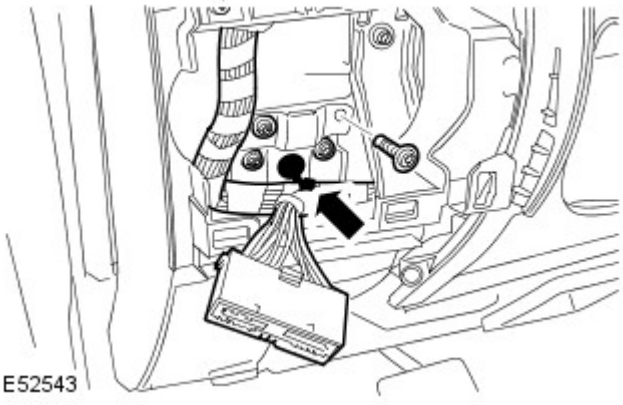

6. Release the stoplamp wiring harness.
   - Disconnect the electrical connector.

transmissionmanuals.com

- Release the 2 clips.

7. Remove the stoplamp switch.

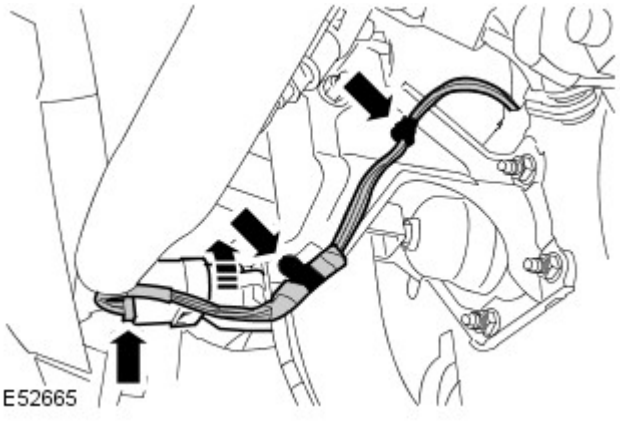

8. Remove clutch pedal spring assister.

9. Release the clutch master cylinder.

- Release the clutch master cylinder clevis pin.
- Remove the 2 nuts.

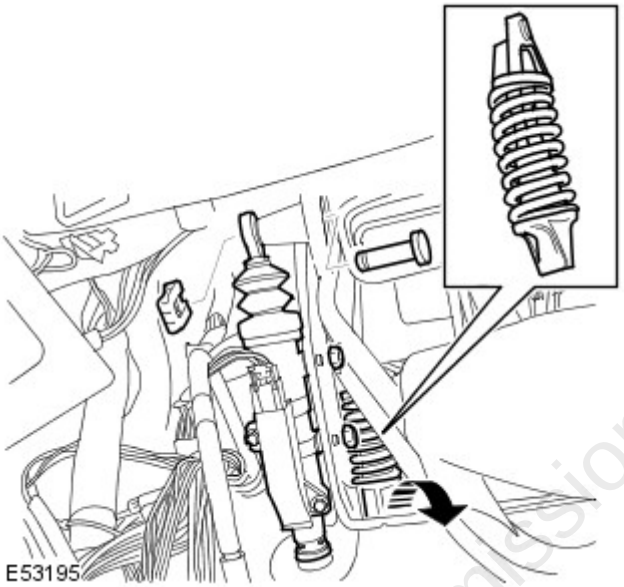

10. Remove the pedal assembly.

- Remove the 2 nuts.

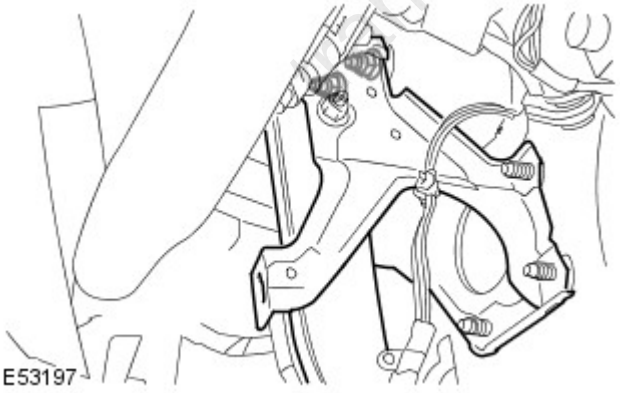

11. NOTE: Do not disassemble further if the component is removed for access only.

Remove the brake pedal pad.

12. Remove the clutch pedal pad.

transmissionmanuals.com

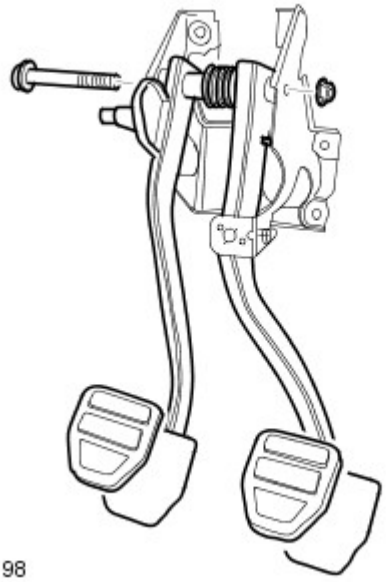

E53198

13. Remove the pedals.

- Carefully release the spring tension.
- Remove the bolt and discard the nut.

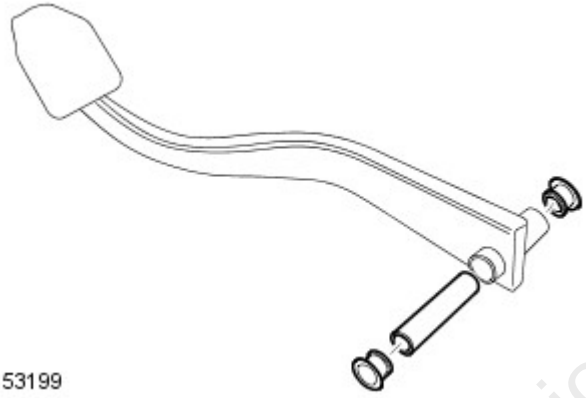

E53199

14. Remove the 3 pedal bushings.

transmissionmanuals.com

Installation

1. Install the bushing.

- Clean the component mating faces.
- Lubricate the components.

2. Install the pedals.

- Install the return spring.
- Tighten the nut and bolt to 45 Nm (33 lb.ft).

3. Install the clutch pedal pad.
4. Install the brake pedal pad.
5. Install the stoplamp switch.
6. Install the pedal assembly.

- Tighten the nuts to 25 Nm (18 lb.ft).

7. Install the clutch master cylinder.

- Tighten the nuts to 10 Nm (7 lb.ft).
- Install the clevis pin.

8. Install the clutch pedal spring assister.
9. Secure the wiring harness.

- Secure the clips.
- Connect the electrical connector.

10. Install the brake pedal bracket.

- Tighten the Torx bolt to 10 Nm (7 lb.ft).
- Secure the wiring harness.

11. Install the instrument panel access panel.

- Secure with the clips.

12. Install the closing trim panel.

- Connect the electrical connector.
- Secure the clip.
- Tighten the screws.

13. Install the headlamp switch.
For additional information, refer to: Headlamp Switch (417-01, Removal and Installation).

14. Install the brake booster.
For additional information, refer to: Brake Booster (206-07, Removal and Installation).

transmissionmanuals.com

Published: 11-May-2011

Clutch Controls - TDV6 2.7L Diesel - Clutch Slave Cylinder

Removal and Installation

Removal

• NOTE: The clutch release bearing is is included with the slave cylinder assembly.

1. WARNING: Do not work on or under a vehicle supported only by a jack. Always support the vehicle on safety stands.

Raise and support the vehicle.

2. Remove the transmission.
For additional information, refer to: Transmission (308-03 Manual Transmission/Transaxle - TDV6 2.7L Diesel, Removal).

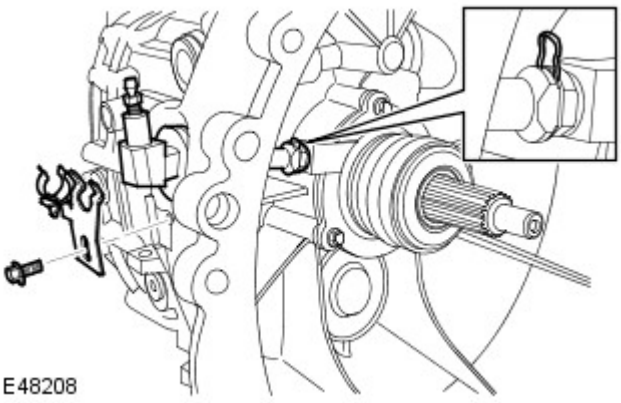

3. CAUTION: Always plug any open connections to prevent contamination.

• NOTE: Position cloth to collect fluid spillage.

Remove the fluid pipe.

- Remove the clip.
- Remove the bolt.
- Remove the clamp.
- Remove and discard the O-ring seal.

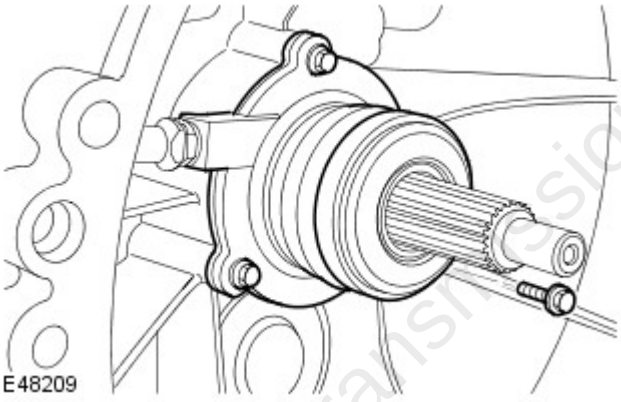

4. Remove the clutch slave cylinder and release bearing assembly.

- Remove the 3 bolts.

transmissionmanuals.com

Installation

1. Install the clutch slave cylinder and release bearing assembly.

- Clean the component mating faces.
- Tighten the bolts to 10 Nm (7 lb.ft).

2. Install the fluid pipe.

- Clean the component mating faces.
- Install a new O-ring seal.
- Install the clip.
- Install the clamp.
- Tighten the bolt to 10 Nm (7 lb.ft).

3. Install the transmission.
For additional information, refer to: Transmission (308-03 Manual Transmission/Transaxle - TDV6 2.7L Diesel, Removal).